⚠Warning: This water heater is not suitable for use in manufactured (mobile) homes!

Use & Care Manual

With Installation Instructions for the Installer

Compliant with South Coast Air Quality Management District Rule 1121 10 ng/J NOx Emissions

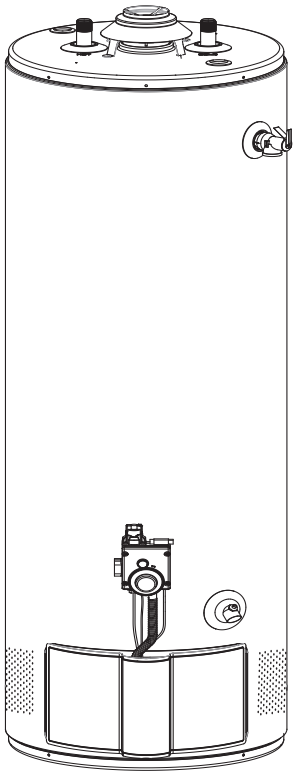

Residential Gas - Low NOx Emissions

Water Heaters

Residential 28, 38, 40, 48 and 50 Gallon

The purpose of this manual is twofold: one, to provide the installer with the basic directions and recommendations for the proper installation and adjustment of the water heater; and two, for the owner–operator, to explain the features, operation, safety precautions, maintenance and troubleshooting of the water heater. This manual also includes a parts list.

It is imperative that all persons who are expected to install, operate or adjust this water heater read the instructions carefully so they may understand how to perform these operations. If you do not understand these instructions or any terms within it, seek professional advice.

Any questions regarding the operation, maintenance, service or warranty of this water heater should be directed to the seller from whom it was purchased. If additional information is required, refer to the section on "If you need service."

Do not destroy this manual. Please read carefully and keep in a safe place for future reference.

Recognize this symbol as an indication of Important Safety Information!

California Proposition 65 Warning: This product contains chemicals known to the State of California to cause cancer, birth defects or other reproductive harm.

WARNING: If the information in these instructions is not followed exactly, a fire or explosion may result causing property damage, personal injury or death.

⚠ FOR YOUR SAFETY!

— **Do not store or use gasoline or other flammable vapors or liquids or other combustible materials in the vicinity of this or any other appliance. To do so may result in an explosion or fire.**

— **WHAT TO DO IF YOU SMELL GAS**

- **Do not try to light any appliance.**
- **Do not touch any electrical switch; do not use any phone in your building.**
- **Immediately call your gas supplier from a neighbor's phone. Follow the gas supplier's instructions.**
- **If you cannot reach your gas supplier, call the fire department.**
- **Do not return to your home until authorized by the gas supplier or fire department.**

— **Improper installation, adjustment, alteration, service or maintenance can cause property damage, personal injury, or death . Refer to this manual. Installation and service must be performed by a qualified installer, service agency or the gas supplier.**

DESIGN CERTIFIED ®

Printed in USA

DO NOT RETURN this water heater to the store or place of purchase. If you need technical or installation assistance, please call the Technical Support Lines at 1-800-432-8373.

AP14184 (03/07)

Safety Information

Safety Precautions 3–6

LP Gas Models 5

Installation Instructions

Location 7

Water Supply Connections . . 9

Gas Supply. 11

Pipe Insulation 13

Heat Traps 13

Installation Checklist. 14

Potable/Space Heating 15

Operating Instructions

Lighting Instructions 16

Water Temperature 17, 18

Care and Cleaning

Draining 19

Maintenance. 19

Burner Inspection 20

Extended Shut-Down 20

Troubleshooting Tips

Before You Call
For Service. 21, 22

Customer Service

Parts List. 23

If You Need Service 24

FOR YOUR RECORDS

Write the model and serial numbers here:

#

#

You can find them on a label on the appliance.

Staple sales slip or cancelled check here.

Proof of the original purchase date is needed to obtain service under the warranty.

READ THIS MANUAL

Inside you will find many helpful hints on how to use and maintain your water heater properly. A little preventive care on your part can save you time and money over the life of your water heater.

You'll find many answers to common problems in the Troubleshooting Guide. If you review the chart of Troubleshooting Tips first, you may not need to call for service.

READ THE SAFETY INFORMATION

Your safety and the safety of others are very important. There are many important safety messages in this manual and on your appliance. Always read and obey all safety messages.

This is the safety alert symbol. Recognize this symbol as an indication of Important Safety Information! This symbol alerts you to potential hazards that can kill or hurt you and others.

All safety messages will follow the safety alert symbol and either the word "DANGER", "WARNING", "CAUTION" or "NOTICE".

These words mean:

DANGER	**An imminently hazardous situation that will result in death or serious injury.**
WARNING	**A potentially hazardous situation that could result in death or serious injury and/or damage to property.**
CAUTION	**A potentially hazardous situation that may result in minor or moderate injury.**
Notice:	**Attention is called to observe a specified procedure or maintain a specific condition.**

IMPORTANT SAFETY INFORMATION. READ ALL INSTRUCTIONS BEFORE USING.

Be sure to read and understand the entire Use and Care Manual before attempting to install or operate this water heater. It may save you time and money. Pay particular attention to the Safety Instructions. Failure to follow these warnings could result in serious bodily injury or death. Should you have problems understanding the instructions in this manual, or have any questions, STOP, and get help from a qualified service technician, or the local gas utility.

⚠DANGER!

INSTALL THE DRAFT HOOD AND PROPERLY VENT THE WATER HEATER…

Failure to install the draft hood and properly vent the water heater to the outdoors as outlined in the Venting Section of the Installation Instructions in this manual can result in unsafe operation of the water heater. To avoid the risk of fire, explosion, or asphyxiation from carbon monoxide, never operate this water heater unless it is properly vented and has an adequate air supply for proper operation. Be sure to inspect the vent system for proper installation at initial start-up; and at least annually thereafter. Refer to the Care and Cleaning section of this manual for more information regarding vent system inspection.

⚠WARNING!

Gasoline, as well as other flammable materials and liquids which include, but are not limited to (adhesives, solvents, paint thinners etc.), and the vapors they produce are extremely dangerous. DO NOT handle, use or store gasoline or other flammable or combustible materials anywhere near or in the vicinity of a water heater or any other appliance. Be sure to read and follow warning label pictured below and other labels on the water heater, as well as the warnings printed in this manual. Failure to do so can

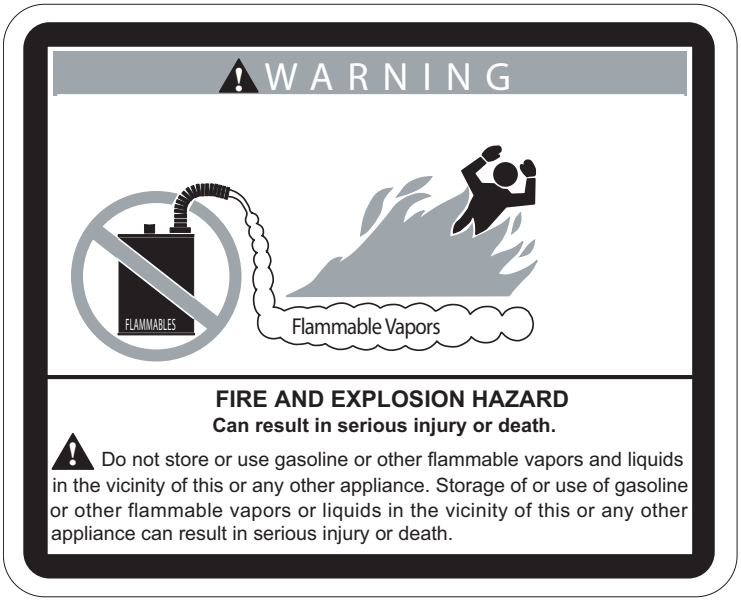

IMPORTANT SAFETY INFORMATION. READ ALL INSTRUCTIONS BEFORE USING.

⚠DANGER!

WATER TEMPERATURE SETTING

Safety and energy conservation are factors to be considered when selecting the water temperature setting of a water heater's gas control. Water temperatures above 125°F can cause severe burns or death from scalding. Be sure to read and follow the warnings outlined on the label pictured below. This label is also located on the water heater.

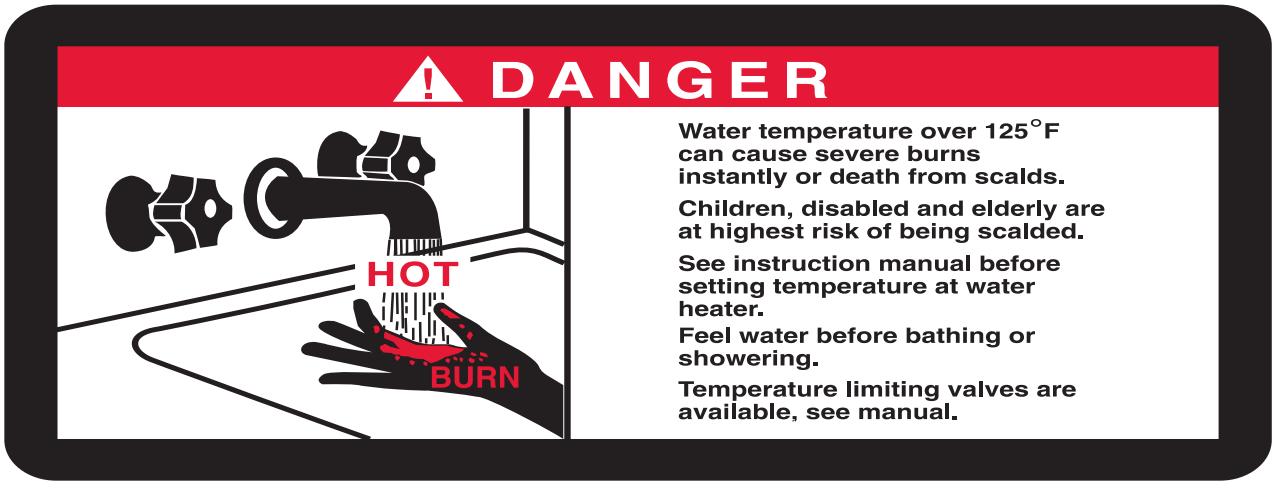

Time/Temperature Relationship in Scalds

Water Temperature	Time To Produce a Serious Burn
120°F	More than 5 minutes
125°F	1½ to 2 minutes
130°F	About 30 seconds
135°F	About 10 seconds
140°F	Less than 5 seconds
145°F	Less than 3 seconds
150°F	About 1½ seconds
155°F	About 1 second

Table courtesy of Shriners Burn Institute

Notice: Mixing valves are available for reducing point of use water temperature by mixing hot and cold water in branch water lines. Contact a licensed plumber or the local plumbing authority for further information.

⚠DANGER: Hotter water increases the potential for Hot Water SCALDS.

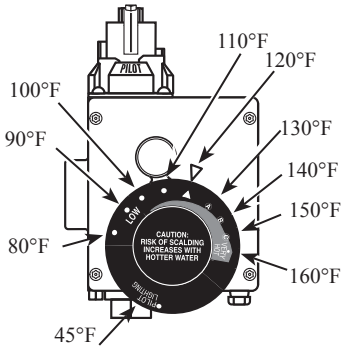

Temperatures are approximate

The chart shown above may be used as a guide in determining the proper water temperature for your home.

⚠DANGER: Households with small children, disabled, or elderly persons may require a 120°F or lower gas control (thermostat) setting to prevent contact with "HOT" water.

Maximum water temperatures occur just after the burner has shut off. To find water temperature being delivered, turn on a hot water faucet and place a thermometer in the water stream and read the thermometer.(See page 17 and 18 for more details.)

The temperature of the water in the heater can be regulated by setting the temperature dial on the front of the gas control (thermostat). To comply with safety regulations the gas control(thermostat) was set at its lowest setting before the water heater was shipped from the factory.

The illustration at the left details the approximate water temperature for each mark on the Gas Control (Thermostat) Temperature Dial.

⚠DANGER!

LIQUEFIED PETROLEUM (LP) AND NATURAL GAS MODELS

LP and Natural gas have an odorant added to aid in detecting a gas leak. Some people may not physically be able to smell or recognize this odorant. If you are unsure or unfamiliar with the smell of LP or natural gas, ask the gas supplier. Other conditions, such as "odorant fade", which causes the odorant to diminish in intensity, can also hide or camouflage a gas leak.

- **Water heaters utilizing LP gas are different from natural gas models. A natural gas water heater will not function safely on LP gas and vice versa.**
- **No attempt should ever be made to convert the water heater from natural gas to LP gas. To avoid possible equipment damage, personal injury or fire, do not connect the water heater to a fuel type not in accordance with the unit data plate. LP for LP units. Natural gas for natural gas units. These units are not certified for any other fuel type.**
- **LP appliances should not be installed below grade (for example, in a basement) if such installation is prohibited by federal, state and/or local laws, rules, regulations or customs.**
- **LP gas must be used with great caution. It is heavier than air and will collect first in lower areas making it hard to detect at nose level.**
- **Before attempting to light the water heater, make sure to look and smell for gas leaks. Use a soapy solution to check all gas fittings and connections. Bubbling at a connection indicates a leak that must be corrected. When smelling to detect a gas leak, be sure to sniff near the floor also.**
- **Gas detectors are recommended in LP & natural gas applications and their installation should be in accordance with the detector manufacturer's recommendations and/or local laws, rules, regulations or customs.**
- **It is recommended that more than one method, such as soapy solution, gas detectors, etc., be used to detect leaks in gas applications.**

⚠DANGER: If a gas leak is present or suspected:

- ***Do not*** **attempt to find the cause yourself.**
- ***Do not*** **try to light any appliance.**
- ***Do not*** **touch any electrical switch.**
- ***Do not*** **use any phone in your building.**
- **Leave the house immediately and make sure your family and pets leave also.**
- **Leave the doors open for ventilation and contact the gas supplier, a qualified service agency or the fire department.**
- **Stay away from the house (or building) until the service call has been made, the leak is corrected and a qualified agency has determined the area to be safe.**

IMPORTANT SAFETY INFORMATION. READ ALL INSTRUCTIONS BEFORE USING.

⚠WARNING!

For your safety, the information in this manual must be followed to minimize the risk of fire or explosion, electric shock, or to prevent property damage, personal injury, or loss of life.

FOR INSTALLATIONS IN THE STATE OF CALIFORNIA

California Law requires that residential water heaters must be braced, anchored or strapped to resist falling or horizontal displacement due to earthquake motions. For residential water heaters up to 52-gallon capacity, a brochure with generic earthquake bracing instructions can be obtained from: Office of the State Architect, 1102 Q Street, Suite 5100, Sacramento, CA 95814 or you may call 916-445-8100 or ask a water heater dealer.

However, applicable local codes shall govern installation. For residential water heaters of a capacity greater than 52 gallons, consult the local building jurisdiction for acceptable bracing procedures.

SAFETY PRECAUTIONS

Have the installer show you the location of the gas shut-off valve and how to shut it off if necessary. Turn off the manual shut-off valve if the water heater has been subjected to overheating, fire, flood, physical damage or if the gas supply fails to shut off.

- Read this manual entirely before installing or operating the water heater.
- Use this appliance only for its intended purpose as described in this Use and Care Manual.
- Be sure your appliance is properly installed in accordance with local codes and the provided installation instructions.
- **Do not** attempt to repair or replace any part of your water heater unless it is specifically recommended in this manual. All other servicing should be referred to a qualified technician.

READ AND FOLLOW THIS SAFETY INFORMATION CAREFULLY.

SAVE THESE INSTRUCTIONS

Installing the water heater.

This water heater must be installed in accordance with these instructions, local codes, utility company requirements, and/or in the absence of local codes, use the latest edition of the American National Standard/National Fuel Gas Code. A copy can be purchased from either the American Gas Association, 400 N. Capitol Street NW, Washington, DC 20001 as ANSI standard Z223.1 or National Fire Protection Association, 1 Batterymarch Park, Quincy, MA 02269 as booklet NFPA 54.

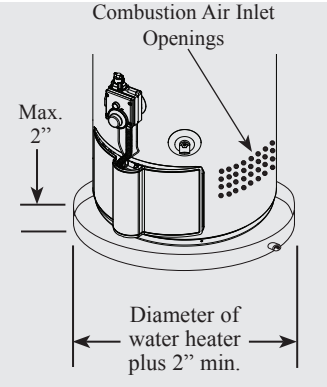

The auxiliary catch pan installation MUST conform to local codes.

Top View Alcove

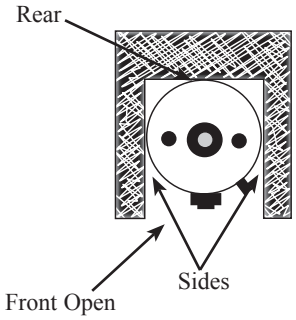

Top View Closet

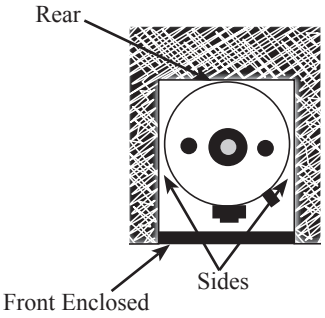

⚠WARNING: Combustible construction refers to adjacent walls and ceilings and should not be confused with combustible or flammable products and materials. Combustible and/or flammable products and materials should never be stored in the vicinity of this or any gas appliance.

Location

The water heater should not be located in an area where leakage from the tank or connections will result in damage to the area adjacent to the heater or to lower floors of the structure.

When such areas cannot be avoided it is recommended that a suitable catch pan, adequately drained, must be installed under the water heater.

The pan must not restrict air flow to the combustion air inlet openings (perforation openings) located around the lower perimeter of the water heater.

Catch pan kits are available from the store where the water heater was purchased, or any water heater distributor.

Make certain the floor underneath the water heater is strong enough to sufficiently support the weight of the water heater once it is filled with water.

A gas fired water heater or any other appliance should not be installed in a space where liquids which give off flammable vapors are to be used or stored. Such liquids include gasoline, LP gas (butane or propane), paint or adhesives and their thinners, solvents or removers.

When installed in a closet, DO NOT block or obstruct any of the combustion air inlet openings located around the perimeter of the water heater. A minimum of 1” is required between these combustion air inlet openings and any obstruction.

Because of natural air movement in a room or other enclosed space, flammable vapors can be carried some distance from where liquids which give off flammable vapors are to be used or stored. The open flame of the water heater’s pilot or main burner can ignite these vapors and create a **shut down condition of the water heater which will not allow the water heater to ignite until examined by a Qualified Service Technician.**

The water heater must be located so it is not subject to physical damage, for example, by moving vehicles, area flooding, etc.

If local codes require the use of a stand kit to raise the water heater 18” above the floor, please contact the store where the water heater was purchased, or any water heater distributor. These kits must comply with local codes.

- The water heater should be installed as close as practical to the gas vent or chimney.
- Long hot water lines should be insulated to conserve water and energy.
- The water heater and water lines should be protected from exposure to freezing temperatures.
- **Do not** install the water heater in bathrooms, bedrooms, any occupied rooms normally kept closed, or in unprotected outdoor areas.
- Minimum clearance from combustible construction:

Location	Front	Sides	Rear	Top
Alcove	3” (7.6 cm)	0” (0 cm)	0” (0 cm)	12” (30.5 cm)
Closet	3” (7.6 cm)	1” (2.5 cm)	0” (0 cm)	12” (30.5 cm)

If the clearances stated on the Instruction/Warning Label, located on the front of the heater differ, install the water heater according to the clearances stated on the label.

- If the water heater is installed in an alcove or closet, the entire floor must be covered by a wood or metal panel. A minimum of 24” clearance from the front and top should be available for adequate inspection and servicing.
- The water heater may be installed on combustible floors, but not directly on carpeting. If the water heater must be installed on carpeting, place a metal or wood panel beneath the water heater, extending beyond its full width and depth at least 3” in all directions.

Installing the water heater.

Inspect Shipment

Inspect the water heater for possible damage. Check the markings on the rating plate of the water heater to be certain the type of gas supplied corresponds to the water heater requirements.

Combustion and Ventilation Air

Proper operation of the water heater requires air for combustion and ventilation. Provisions for combustion and ventilation air must comply with referenced codes and standards.

When installed in a closet, DO NOT block or obstruct any of the combustion air inlet openings located around the perimeter of the water heater. A minimum of 1" is required between these combustion air inlet openings and any obstruction.

NOTICE: If the water heater is installed in an unconfined space within a building of conventional frame, masonry or metal construction, infiltration air is normally adequate for proper combustion and ventilation. If the water heater is installed in a confined space, provisions for combustion and ventilation air must be made.

A confined space is one having a volume of less than 50 cubic feet per 1000 Btuh of the aggregate input of all appliances within that space.

The air must be supplied through two permanent openings of equal area. One is to be located within 12" above the floor and the other is to be located within 12" from the ceiling.

The minimum net free area of each opening must not be less than one square inch per 1000 Btuh of the total input rating of all the appliances in the enclosure (but not less than 100 square inches), if each opening communicates with other unconfined areas inside the building.

Buildings of unusually tight construction shall have the combustion and ventilation air supplied from outdoors, or a freely ventilated attic or crawl space.

If air is supplied from outdoors, directly or through vertical ducts, there must be two openings located as specified above and each must have a minimum net free area of not less than one square inch per 4000 Btuh of the total input rating of all the appliances in the enclosure.

If horizontal ducts are used to communicate with the outdoors, each opening must have a minimum net free area of not less than one square inch per 2000 Btuh of the total input rating of all the appliances in the enclosure. If ducts are used, the minimum dimensions of rectangular air ducts shall not be less than 3".

NOTICE: If the duct openings which supply combustion and ventilation air are to be covered with a protective screen or grill, the net free area (openings in the material) of the covering material must be used in determining the size of the openings. Protective screening for the openings MUST NOT be smaller than 1/4"mesh to prevent clogging by lint or other debris.

NOTICE: The water heater should not be installed near an air supply containing halogenated hydrocarbons.

Corrosive Atmospheres

The air in beauty shops, dry cleaning establishments, photo processing labs, and storage areas for liquid and powdered bleaches or swimming pool chemicals often contain such halogenated hydrocarbons.

An air supply containing halogenated hydrocarbons may be safe to breathe, but when it passes through a gas flame corrosive elements are released that will shorten the life of any gas burning appliance.

Propellants from common spray cans or gas leaks from A/C and refrigeration equipment are highly corrosive after passing through a flame.

The water heater warranty is voided when failure of the heater is due to operation in a corrosive atmosphere.

Thermal Expansion

Determine if a check valve exists in the inlet water line. Check with your local water utility company. It may have been installed in the cold water line as a separate back flow preventer, or it may be part of a pressure reducing valve, water meter or water softener. A check valve located in the cold water inlet line can cause what is referred to as a **"closed water system"**. A cold water inlet line with no check valve or back flow prevention device is referred to as an **"open"** water system.

As water is heated, it expands in volume and creates an increase in the pressure within the water system. This action is referred to as **"thermal expansion"**. In an **"open"** water system, expanding water which exceeds the capacity of the water heater flows back into the city main where the pressure is easily dissipated.

A **"closed water system"**, however, prevents the expanding water from flowing back into the main supply line, and the result of **"thermal expansion"** can create a rapid and dangerous pressure increase in the water heater and system piping. This rapid pressure increase can quickly reach the safety setting of the relief valve, causing it to operate during each heating cycle. Thermal expansion, and the resulting rapid, and repeated expansion and contraction of components in the water heater and piping system can cause premature failure of the relief valve, and possibly the heater itself. Replacing the relief valve **will not** correct the problem!

The suggested method of controlling thermal expansion is to install an expansion tank in the cold water line between the water heater and the check valve (see illustration below). The expansion tank is designed with an air cushion built in that compresses as the system pressure increases, thereby relieving the over pressure condition and eliminating the repeated operation of the relief valve. Other methods of controlling thermal expansion are also available. Contact your installing contractor, water supplier or plumbing inspector for additional information regarding this subject.

IMPORTANT: Do not apply heat to the HOT or COLD water connections. If sweat connections are used, sweat tubing to adapter before fitting adapter to the cold water connections on heater. Any heat applied to the cold water supply fittings will permanently damage the dip tube and the heat traps in the hot/cold nipples.

NOTICE: The National Fuel Gas Code (NFGC) mandates a manual gas shut-off valve: See (NFGC) for complete instructions. Local codes or plumbing authority requirements may vary from the instructions or diagrams provided and take precedent over these instructions.

Water Supply Connections

Refer to the illustration below for suggested typical installation. The installation of unions or flexible copper connectors is recommended on the hot and cold water connections so that the water heater may be easily disconnected for servicing if necessary. The HOT and COLD water connections are clearly marked and are 3/4" NPT on all models. Install a shut-off valve in the cold water line near the water heater.

Typical Installation

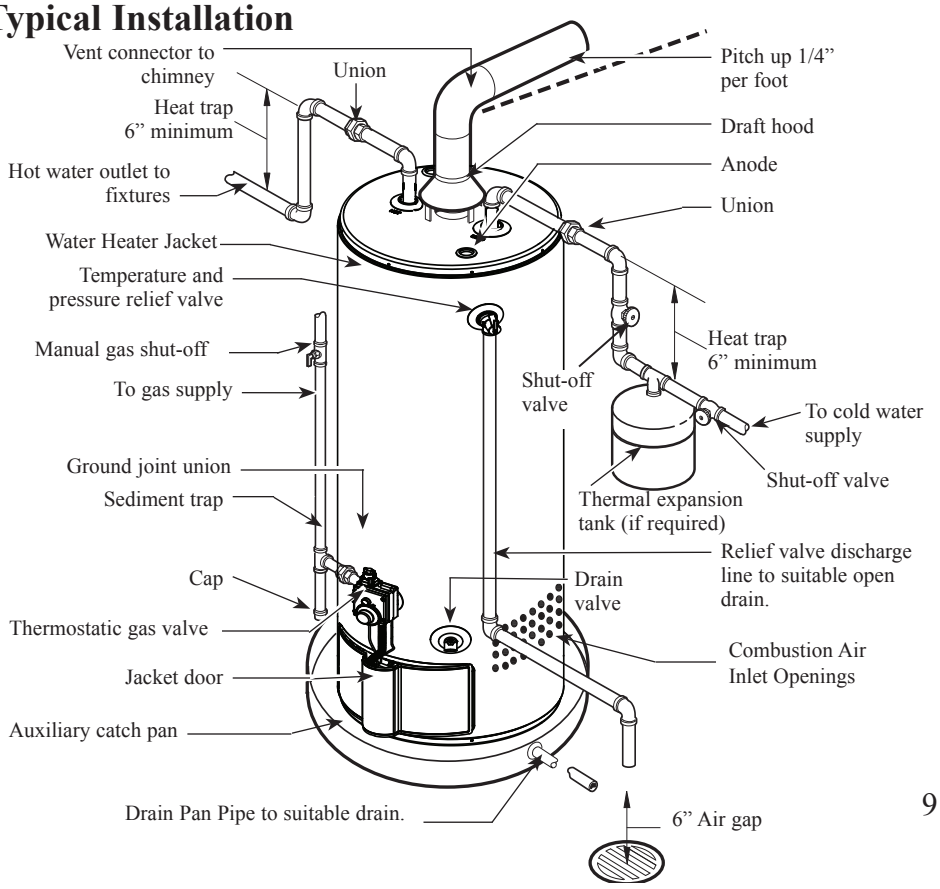

Installing the water heater.

A new combination temperature and pressure relief valve, complying with the Standard for Relief Valves and Automatic Gas Shut-Off Devices for Hot Water Supply Systems, ANSI Z21.22, is supplied and must remain in the opening provided and marked for the purpose on the water heater. No valve of any type should be installed between the relief valve and the tank. Local codes shall govern the installation of relief valves.

Relief Valve

The pressure rating of the relief valve must not exceed 150 PSI, the maximum working pressure of the water heater as marked on the rating plate.

The Btuh rating of the relief valve must equal or exceed the Btuh input of the water heater as marked on its rating plate.

Position the outlet of the relief valve above a suitable open drain to eliminate potential water damage. Piping used should be of a type approved for hot water distribution.

The discharge line must be no smaller than the outlet of the valve and must pitch downward from the valve to allow complete drainage (by gravity) of the relief valve and discharge line.

The end of the discharge line should not be threaded or concealed and should be protected from freezing. No valve of any type, restriction, or reducer coupling should be installed in the discharge line.

⚠WARNING: The tank must be full of water before heater is turned on. The water heater warranty does not cover damage or failure resulting from operation with an empty or partially empty tank.

To Fill the Water Heater

Make certain that the drain valve is closed, then open the shut-off valve in the cold water supply line.

Open each hot water faucet slowly to allow the air to vent from the water heater and piping.

A steady flow of water from the hot water faucet(s) indicates a full water heater.

Condensation

Condensation can form on the tank when it is first filled with water. Condensation might also occur with a heavy water draw and very cold inlet water temperatures.

Drops of water falling on the burner can produce a sizzling or pinging sound.

This condition is not unusual, and will disappear after the water becomes heated. If, however, the condensation continues, examine the piping and fittings for possible leaks.

NOTICE: Additional information on this subject may be found at www.rheem.com, under Rheem Water Heating, "Support", scroll down to the Technical Service Section and to Bulletins 1400 Series Section and choose Bulletin #1402.

⚠WARNING: Do not attempt to convert this water heater for use with a different type of gas other than the type shown on the rating plate. Such conversion could result in hazardous operating conditions.

Gas Supply

The branch gas supply line to the water heater should be clean 1/2" black steel pipe or other approved gas piping material.

A ground joint union or ANSI design certified semi-rigid or flexible gas appliance connector should be installed in the gas line close to the water heater. The National Fuel Gas Code (NFGC) mandates a manual gas shut-off valve: See (NFGC) for complete instructions.

If flexible connectors are used, the maximum length shall not exceed 36".

If lever type gas shut-offs are used, they shall be T-Handle type.

Compound used on the threaded joints of the gas piping must be of the type resistant to the action of LP gas. Use compound sparingly on male threads only.

A sediment trap should be installed at the bottom of the gas line.

Do not use excessive force (over 31.5 ft lbs.) in tightening the pipe joint at the gas control (thermostat) inlet, particularly if teflon pipe compound is used, as the valve body may be damaged.

The inlet gas pressure to the water heater must not exceed 10.5" w.c. for natural gas, or 14" w.c. for LP gas. For purposes of input adjustment, the minimum inlet gas pressure (with main burner on) is shown on the water heater rating plate. If high or low gas pressures are present, contact your gas supplier for correction.

Leak Testing

⚠WARNING: Never use an open flame to test for gas leaks, as property damage, personal injury, or death could result.

The water heater and its gas connections must be leak tested at normal operating pressures before it is placed in operation.

1. Turn on the manual gas shut-off valve near the water heater.
2. Use a soapy water solution to test for leaks at all connections and fittings. Bubbles indicate a gas leak that must be corrected.

The factory connections to the gas control (thermostat) should also be leak tested after the water heater is placed in operation.

Pressure Testing the Gas Supply System

The water heater and its manual gas shut-off valve must be disconnected from the gas supply piping system during any pressure testing of that system at pressures in excess of 3/8 psi (10.5" w.c.) for natural gas.

The water heater must be isolated from the gas piping system by closing the manual gas shut-off valve during any pressure testing of the gas supply piping at pressures equal to or less than 3/8 psi (10.5" w.c.) for natural gas.

High Altitude

⚠WARNING: Failure to install a water heater suitable for the altitude at the location it is intended to serve, can result in improper operation of the appliance resulting in property damage and/or, producing carbon monoxide gas, which could result in personal injury, or death.

This water heater is certified for installations up to 10,200 feet above sea level.

⚠WARNING: Installations above 10,200 feet are not authorized and may result in improper and inefficient operation of the appliance, producing carbon monoxide gas in excess of acceptable limits, which could result in serious injury or death.

Installing the water heater.

The water heater must be installed with the factory supplied draft hood in place.

⚠DANGER: Failure to install the draft hood and properly vent the water heater to the outdoors as outlined in the Venting section of this manual will result in unsafe operation of the water heater causing bodily injury, explosion, fire or death. To avoid the risk of fire, explosion, or asphyxiation from carbon monoxide, NEVER operate the water heater unless it is properly vented and has adequate air supply for proper operation as outlined in the Venting section of this manual.

Venting

Vent connectors must be attached to the draft hood outlet to connect the water heater to the gas vent or chimney. The vent connectors must be the same size (diameter) as the draft hood or larger, never smaller.

For proper venting in certain installations a larger vent connector size may be needed. Consult the Vent Tables in Appendix G of the latest version of the National Fuel Gas Code (ANSI standard Z223.1 or NFPA 54.)

Horizontal vent connectors must be pitched upward to the chimney at least 1/4" per foot of length. Single wall vent connectors must be at least 6" from adjacent unprotected combustible surface. Vent joints must be securely fastened by sheet metal screws or other approved method.

Test for spillage at the draft hood relief opening after 5 minutes of main burner operation. Use a flame of a match or candle or smoke. The flame or smoke should be pulled into the draft hood's relief opening(s).

Insulation Blankets

⚠WARNING: If local codes require external application of insulation blanket kits the manufacturer's instructions included with the kit must be carefully followed.

Insulation blankets, available to the general public, for external use on gas water heaters are not necessary. The purpose of an insulation blanket is to reduce the standby heat loss encountered with storage tank heaters. This water heater meets or exceeds the **N**ational Appliance Energy Conservation Act standards with respect to insulation and standby loss requirements making an insulation blanket unnecessary.

The manufacturer's warranty does not cover any damage or defect caused by installation, attachment or use of any type of energy saving or other unapproved devices (other than those authorized by the manufacturer) into, onto or in conjunction with the water heater. The use of unauthorized energy saving devices may shorten the life of the water heater and may endanger life and property.

The manufacturer disclaims any responsibility for such loss or injury resulting from the use of such unauthorized devices.

⚠CAUTION: If local codes require the application of an external insulation blanket to this water heater, pay careful attention to the following so as not to restrict the proper function and operation of the water heater:

- Do not cover the operating or warning labels attached to the water heater or attempt to relocate them on the exterior of insulation blanket.
- Do not apply insulation to the top of the water heater. This will interfere with the safe operation of the draft hood.
- Do not cover the burner access door, jacket door, gas control (thermost at)/gas valve or pressure and temperature relief valve.
- Do not apply insulation to the bottom of the water heater or the area where the combustion air inlet openings are located. This area must be unobstructed so as not to restrict combustion air flow to the burner.
- Inspect the insulation blanket frequently making certain it has not sagged and is restricting the air flow to the combustion air inlet openings (perforation holes) located around the lower perimeter of the water heater jacket. This could result in an unsafe operating condition.

Hot and Cold Pipe Insulation Installation

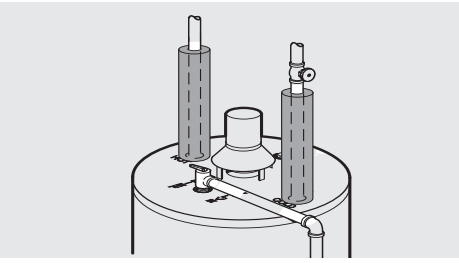

Typical vertical piping arrangement

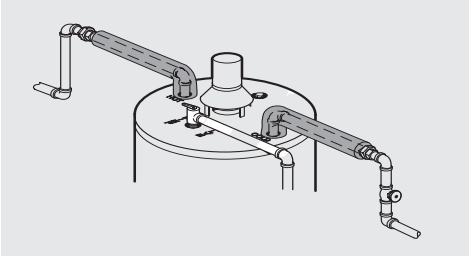

Typical horizontal piping arrangement

For increased energy efficiency, some water heaters have been supplied with two 24” sections of pipe insulation. Please install the insulation, according to the illustrations above, that best meets your requirements.

Heat Trap

For increased energy efficiency, some water heaters have been supplied with factory installed 3/4” NPT heat traps in the hot outlet line and cold water inlet line.

These heat traps may require a minimum of one (1) 90° 3/4” NPT elbow and may require an additional 90° 3/4” NPT elbow or a 3/4” coupling depending on your installation needs. See Illustration of nipples and heat traps on page 23.

During Installation of this water heater.....

DO

- ❑ **DO** check inlet gas pressure to ensure that it is within the range specified on the rating plate.
- ❑ **DO** provide adequate air for combustion and ventilation as discussed in the Use and Care Manual and the National Fuel Gas Code.
- ❑ **DO** maintain proper clearances to combustibles as specified on the rating plate.
- ❑ **DO** ensure that the venting system complies with the guidelines found in the Use and Care Manual and National Fuel Gas Code.
- ❑ **DO** contact a qualified service technician if the pilot or main burner will not stay lit. The burner chamber is designed to be sealed utilizing a gasket and tamper resistant screws.

DON’T

- ❑ **DON’T** block or restrict Combustion Air Inlet Openings located around the lower portion of the water heater jacket.
- ❑ **DON’T** remove the Burner Access Door unless absolutely necessary. This should only be done by a qualified service technician. A new burner access door gasket must be installed on any burner access door that has been removed.
- ❑ **DON’T** install this water heater where standing water may occur. The base of the water heater is meant to be mounted on a dry surface.
- ❑ **DON’T** operate the water heater if the sight glass or burner access door grommet is damaged or broken.

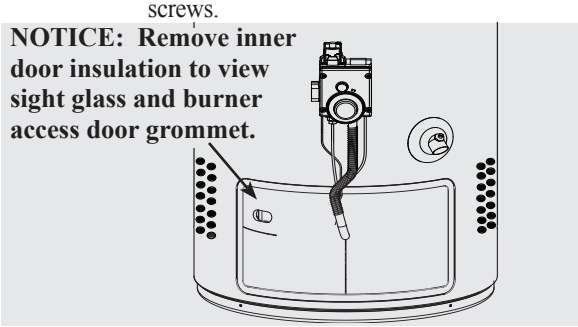

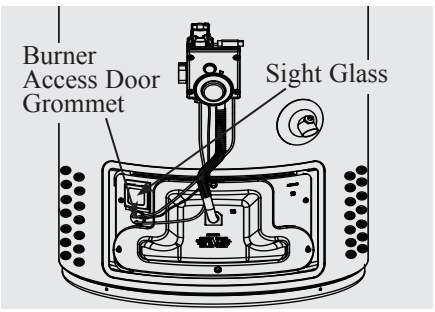

Installation Checklist

A. Water Heater Location

- ❑ Close to area of vent.
- ❑ Indoors and protected from freezing temperatures.
- ❑ Proper clearance from combustible surfaces observed and water heater not installed on carpeted floor.
- ❑ Sufficient fresh air supply for proper operation of water heater.
- ❑ Air supply free of corrosive elements and flammable vapors.
- ❑ Provisions made to protect area from water damage.
- ❑ Sufficient room to service heater.
- ❑ Combustible materials, such as clothing, cleaning materials, rags, etc. clear of the base of the heater.
- ❑ Clearances from combustion air inlet openings observed (see page 7).

B. Water Supply

- ❑ Water heater completely filled with water.
- ❑ Air purged from water heater and piping.
- ❑ Water connections tight and free of leaks.

C. Gas Supply

- ❑ Gas line equipped with shut-off valve, union and sediment trap.
- ❑ Approved pipe joint compound used.
- ❑ Soap and water solution used to check all connections and fittings for possible gas leak.
- ❑ Gas Company inspected installation (if required).

D. Relief Valve

- ❑ Temperature and Pressure Relief Valve properly installed and discharge line run to open drain.
- ❑ Discharge line protected from freezing.

E. Venting

- ❑ Flue baffle properly hung in top of heater's flue.
- ❑ Draft hood properly installed.
- ❑ Vent connector(s) pitched upward to chimney (¼" per foot of length minimum) .
- ❑ Vent connector(s) securely fastened together with screws.
- ❑ Single wall vent connector(s) at least 6" from combustible material.

Supplemental instructions for gas water heaters installed in potable/space heating applications.

Local codes or plumbing authority requirements may vary from the instructions or diagrams provided in this manual and take precedent over these instructions.

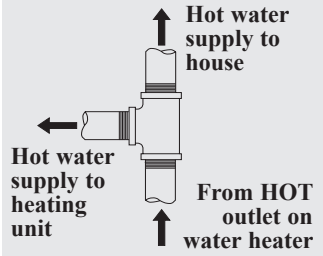

Tee fitting for vertical hot water supply lines.

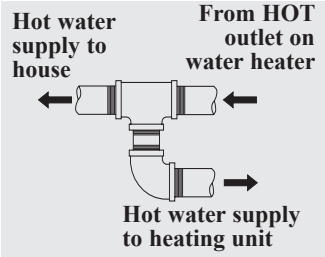

Tee fitting for horizontal hot water supply lines.

Combination Potable and Space Heating Application

Tee fitting must be installed as shown. This ensures that any air in the water lines will be purged through the domestic water faucets and showers.

⚠DANGER: When this system requires water for space heating at elevated temperatures (above 125°F [52°C.]), a mixing or tempering valve must be installed in the hot water supply line to the house in order to reduce the scald hazard potential.

⚠DANGER: Any piping or components used in the installation of this water heater in a combination potable and space heating application must be suitable for use with drinking water.

⚠DANGER: If this water heater is installed in an application intended to supply domestic hot water needs and hot water for space heating purposes, do not connect the heater to an existing heating unit or components of a heating system that have previously been used with a non drinking water system. Toxic chemicals such as those used for boiler treatment may be present and will contaminate the drinking water supply causing possible health risks. Never introduce toxic chemicals, such as those used for boiler treatment, into this system.

Typical Piping Diagram for Combination Potable/Space Heating Installation

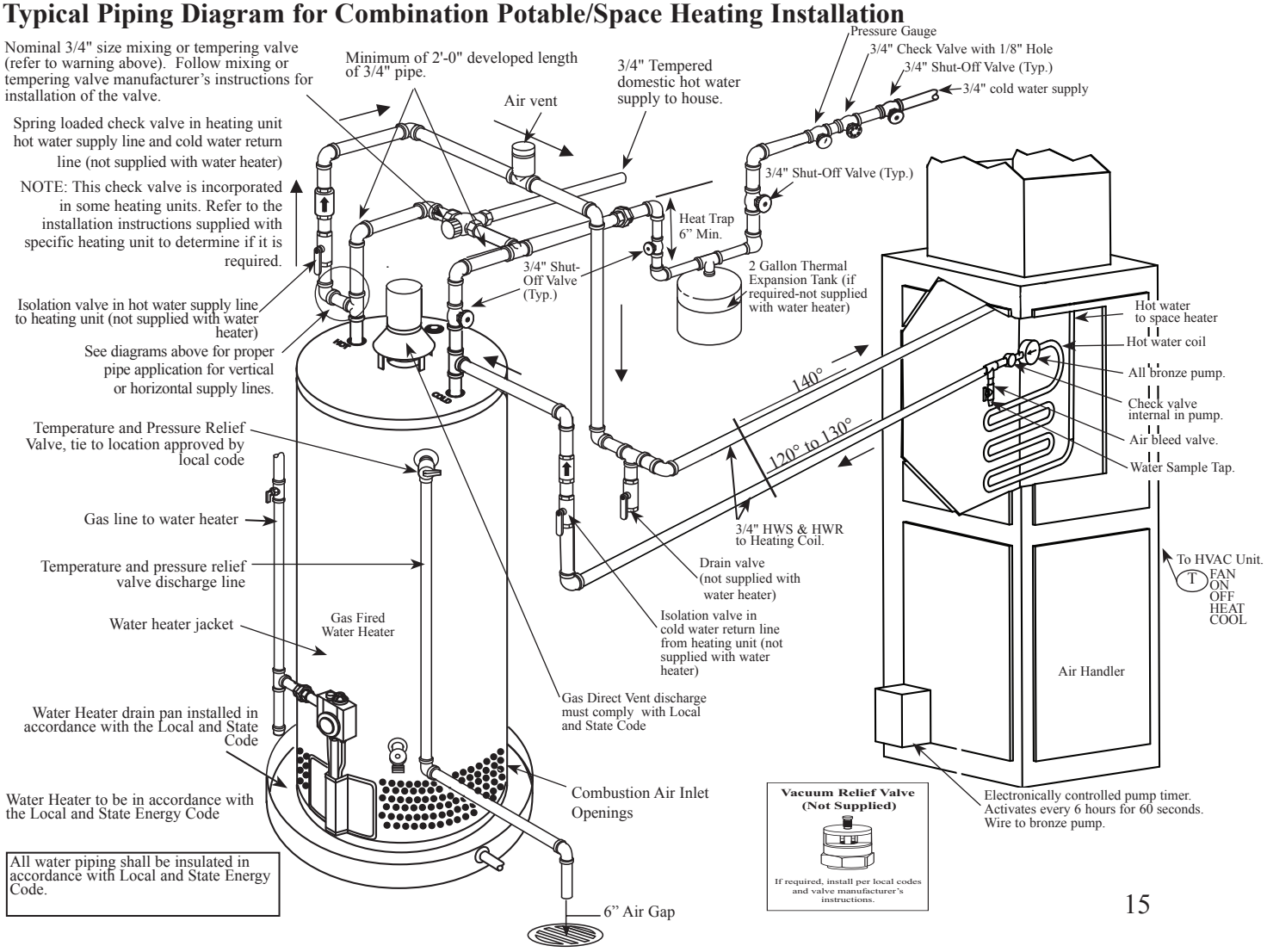

Lighting the water heater.

Before operating this water heater, be sure to read and follow the instructions on the label pictured below and all other labels on the water heater, as well as the warnings printed in this manual. Failure to do so can result in unsafe operation of the water heater resulting in property damage, personal injury, or death . Should you have any problems reading or following the instructions in this manual, STOP, and get help from a qualified person.

FOR YOUR SAFETY READ BEFORE OPERATING

⚠ WARNING: If you do not follow these instructions and the Use & Care Manual instructions exactly, a fire or explosion may result causing property damage, personal injury or loss of life.

A. This appliance has a pilot which is lit by a piezo-electric spark gas ignition system. **Do *NOT* open the inner door of this appliance and try to light the pilot by hand!**

B. BEFORE LIGHTING smell all around the appliance area for gas. Be sure to smell next to the floor because some gas is heavier than air and will settle on the floor.
WHAT TO DO IF YOU SMELL GAS
- Do not try to light any appliance.
- Do not touch any electric switch; do not use any phone in your building.
- Immediately call your gas supplier from a neighbor's phone. Follow the gas supplier's instructions.
- If you cannot reach your gas supplier, call the fire department.

C. Use only your hand to turn the gas control knob. Never use tools. If the knob will not turn by hand, don't try to repair it, call a qualified service technician. Force or attempted repair may result in a fire or explosion.

D. Do not use this appliance if any part has been under water. Immediately call a qualified installer or service agency to replace a flooded water heater. Do not attempt to repair the unit! It must be replaced!

LIGHTING INSTRUCTION

1. STOP! Read safety information above on this label.
2. Set the thermostat dial to the lowest setting "PILOT LIGHTING" by turning the thermostat dial clock-wise ↘ until it stops.
3. Slightly depress the gas control knob A and turn clockwise ↘ to "OFF" position. Note: Knob cannot be turned from "PILOT" position unless pushed down slightly. Do not use force.
4. Wait five (5) minutes to clear out any gas. If you smell any gas, STOP! Follow "B" in the safety information above on this label. If you do not smell gas, go to the next step.
5. Remove the outer door from the water heater. Do not attempt to remove the inner door.
6. Locate the piezo-electric spark generator which is located on top of the combination gas control.
7. Turn the gas control knob counter-clockwise ↙ to the "PILOT" position.

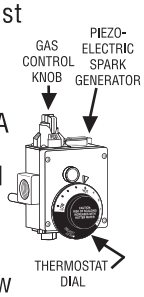

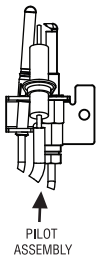

8. Depress and hold the gas control knob all the way down. Immediately depress the piezo-electric spark generator button several times until the pilot is lit. The pilot flame can only be seen through the sight glass window located on the inner door.
9. Continue to hold down the gas control knob for about one (1) minute after the pilot is lit. If it goes out repeat steps 3 to 9.
   - If the gas control knob does not pop up when released, stop and immediately call your service technician or gas supplier.
   - If the pilot will not stay lit after several tries, turn the gas control knob clock-wise ↘ to "OFF" and call your service technician or gas supplier.
10. Once the pilot flame is established replace the outer door.
11. Turn the gas control knob counter-clockwise ↙ to the "ON" position.
12. Set the thermostat dial to desired setting. The preferred starting point for temperature setting is indicated by ▲ on the thermostat dial.

TO TURN GAS OFF TO THE APPLIANCE

1. Set the thermostat dial to the lowest setting "PILOT LIGHTING" by turning the thermostat dial clock-wise ↘ until it stops.
2. Slightly depress the gas control knob and turn clockwise ↘ to "OFF POSITION". Note: Knob cannot be turned from "PILOT" position unless pushed down slightly. Do not use force.

Operating the water heater.

⚠ CAUTION: Hydrogen gas can be produced in a hot water system served by this water heater that has not been used for a long period of time (generally two weeks or more). HYDROGEN GAS IS EXTREMELY FLAMMABLE!! To dissipate such gas and to reduce risk of injury, it is recommended that the hot water faucet be opened for several minutes at the kitchen sink before using any electrical appliance connected to the hot water system. If hydrogen is present, there will be an unusual sound such as air escaping through the pipe as the water begins to flow. Do not smoke or use an open flame near the faucet at the time it is open.

Safety Precautions

A **Do** turn off manual gas shut-off valve if water heater has been subjected to over heating, fire, flood, physical damage or if the gas supply fails to shut off.

B **Do Not** turn on water heater unless it is completely filled with water.

C **Do Not** turn on water heater if cold water supply shut-off valve is closed.

D **Do Not** allow combustible materials such as newspaper, rags or mops to accumulate near water heater.

E **Do Not** store or use gasoline or other flammable vapors and liquids, such as adhesives or paint thinner, in vicinity of this or any other appliance. If such flammables must be used, open doors and windows for ventilation, and all gas burning appliances in the vicinity should be shut off including their pilot burners, to avoid vapors lighting.

NOTICE: Flammable vapors can be drawn by air currents from surrounding areas to the water heater.

F If there is any difficulty in understanding or following the Operating Instructions or the Care and Cleaning section, it is recommended that a qualified person or serviceman perform the work.

Water Temperature Setting

⚠ DANGER: Hotter water increases the Potential for Hot Water SCALDS. Households with small children, disabled, or elderly persons may require a 120°F or lower gas control (thermostat) setting to prevent contact with HOT water.

The temperature of the water in the water heater can be regulated by setting the temperature dial on the front of the gas control (thermostat).

Safety and energy conservation are factors to be considered when selecting the water temperature setting of the water heater's gas control (thermostat(s)). The lower the temperature setting, the greater the savings in energy and operating costs.

To comply with safety regulations, the gas control (thermostat) was set at its lowest setting before the water heater was shipped from the factory. The recommended starting point temperature is 120°F.

Water temperatures above 125°F can cause severe burns or death from scalding. Be sure to read and follow the warnings outlined in this manual and on the label located on the water heater near the gas control thermostat.

Mixing valves are available for reducing point of use water temperature by mixing hot and cold water in branch water lines. Contact a licensed plumber or the local plumbing authority for further information. (See page 4 for more details.)

The chart below may be used as a guide in determining the proper water temperature for your home.

Time/Temperature Relationship in Scalds

Water Temperature	Time To Produce a Serious Burn
120°F	More than 5 minutes
125°F	1½ to 2 minutes
130°F	About 30 seconds
135°F	About 10 seconds
140°F	Less than 5 seconds
145°F	Less than 3 seconds
150°F	About 1½ seconds
155°F	About 1 second

Table courtesy of Shriners Burn Institute

Operating the water heater.

Water Temperature Setting…

Maximum water temperatures occur just after the burner has shut off. To determine the water temperature, turn on a hot water faucet and place a thermometer in the water stream.

The reference mark ▲ on the rim of the temperature dial, represents an approximate water temperature of 120°F(49° C).

The reference mark Ⓐ represents an approximate water temperature of 130°F (54° C).

Each reference mark above or below these points indicates an approximate change of 10°F.

To adjust the temperature, turn the temperature dial to an initial setting of 120°F.

A condition known as “stacking” or “layering” can occur when a series of short and frequent hot water draws are taken.

The hottest temperature water will be at the top of the tank, closest to the outlet pipe delivering hot water to the home.

Stacking can cause this top layer of water to be hotter than the water toward the bottom of the tank near the gas control (thermostat).

Therefore, always remember to test the water temperature with your hand before use and remember that hotter water increases the risk of scald injury.

Also, always supervise young children or others who are incapacitated.

The gas control (thermostat) is constructed with a built in safety shut-off device designed to shut off the gas supply to the burner if the pilot flame is extinguished for any reason.

The gas control (thermostat) is also equipped with a single use gas shut off device that will shut off the gas supply to the burner if the water heater exceeds normal operating temperatures. Refer to the (Before You Call For Service) section of this manual, or contact your dealer.

⚠WARNING: Should overheating occur or the gas supply fail to shut off, turn off the manual gas control valve to the appliance.

If the water heater has been subjected to fire, flood or physical damage, turn off the manual gas control (shut-off) valve, and do not operate the water heater again until it has been checked by qualified personnel.

NOTICE: Replace any part of the gas control system which has been under water.

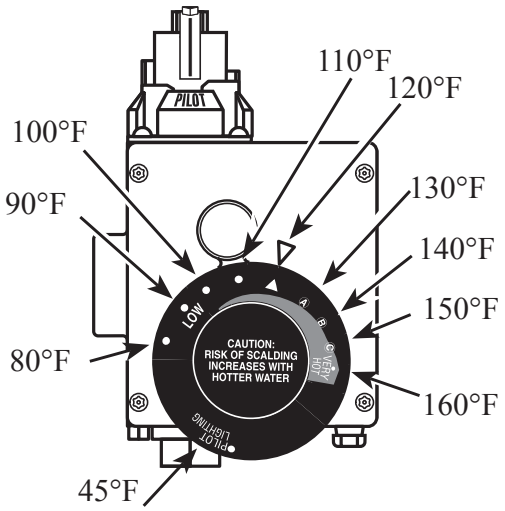

Temperatures are approximate

Care and cleaning of the water heater.

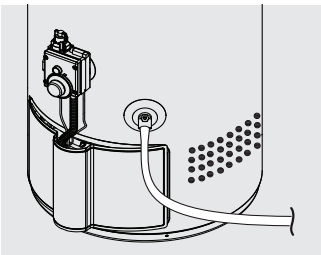

Draining the Water Heater

⚠CAUTION: Shut off gas to the water heater at the gas control (thermostat) gas cock or manual shut-off valve before draining water.

⚠DANGER: Before manually operating the temperature and pressure relief valve, make certain no one will be exposed to the hot water released by the valve. The water drained from the tank may be hot enough to present a scald hazard and should be directed to a suitable drain to prevent injury or damage.

In order to drain the water heater, turn off the cold water supply. Open a hot water faucet or lift the handle on the relief valve to admit air to the tank.

Attach a garden hose to the drain valve on the water heater and direct the stream of water to a drain. Open the valve.

Routine Preventative Maintenance

⚠DANGER: Before manually operating the relief valve, make certain no one will be exposed to the danger of the hot water released by the valve. The water may be hot enough to create a scald hazard. The water should be released into a suitable drain to prevent injury or property damage.

⚠DANGER: Hotter water increases the potential for Hot Water Scalds.

⚠DANGER: Failure to perform the recommended Routine Preventative Maintenance can harm the proper operation of this water heater, which can cause carbon monoxide dangers, excessive hot water temperatures and other potentially hazardous conditions.

Properly maintained, your water heater will provide years of dependable trouble-free service.

It is recommended that a periodic inspection of the gas control (thermostat), burner, relief valve, internal flue-way and venting system should be made by service personnel qualified in gas appliance repair.

It is suggested that a routine preventative maintenance program be established and followed by the user.

At least once a year, lift and release the lever handle on the temperature pressure relief valve, located near the top of the water heater, to make certain the valve operates freely. Allow several gallons to flush through the discharge line to an open drain.

NOTICE: If the temperature and pressure relief valve on the hot water heater discharges periodically, this may be due to thermal expansion in a closed water system. Contact the water supplier or your plumbing contractor on how to correct this. DO NOT plug the relief valve outlet.

A water heater's tank can act as a settling basin for solids suspended in the water. It is therefore not uncommon for hard water deposits to accumulate in the bottom of the tank. If allowed to accumulate, these solids can cover the gas control (thermostat) sensors, causing the sensors to operate erratically. Because accumulated solids can prevent the gas control (thermostat) sensors from accurately reading the water temperature, the water at the fixture can be hotter than the gas control (thermostat) dial setting. It is suggested that a few quarts of water be drained from the water heater's tank every month to clean the tank of these deposits.

Rapid closing of faucets or solenoid valves in automatic water using appliances can cause a banging noise heard in a water pipe. Strategically located risers in the water pipe system or water hammer arresting devices can be used to minimize the problem.

The anode rod should be removed from the water heater's tank annually for inspection and replaced when more than 6" of core wire is exposed at either end of the rod.

Make sure the cold water supply is turned off before removing anode rod.

This water heater incorporates a combustion shut off device that shuts the operation of the water heater down if undesirable combustion conditions occur. Such as the presence of flammable vapors or blockage of the combustion air inlet openings. Please contact a Qualified Service Technician if this occurs.

Housekeeping

⚠DANGER: Combustible materials, such as clothing, cleaning materials, or flammable liquids, etc., must not be placed against or next to the water heater.

Visually inspect pilot burner and relight if necessary.

To ensure sufficient ventilation and combustion air supply, proper clearances must be maintained.

When installed in a closet, DO NOT block or obstruct any of the combustion air inlet openings located around the perimeter of the water heater. A minimum of 1" is required between these combustion air inlet openings and any obstruction.

Care and cleaning of the water heater.

Venting System Inspection

The water heater's internal flue must be inspected annually to be certain it is clean by removing the draft hood and flue baffle.

When reinstalling the flue baffle make certain it is hung securely by its hanger at the top of the flue way.

Reinstall the draft hood.

Inspect the gas venting system and the chimney.

Make certain the vent connector from the draft hood to the chimney is properly positioned and securely attached.

If after inspection of the vent system you found soot or deterioration; call the local gas utility to correct the problem and clean the flue, or replace the flue, flue baffle, and venting system before resuming operation of the water heater.

Test for spillage at the draft hood relief opening after 5 minutes of burner operation. Use a flame of a match or candle or smoke.

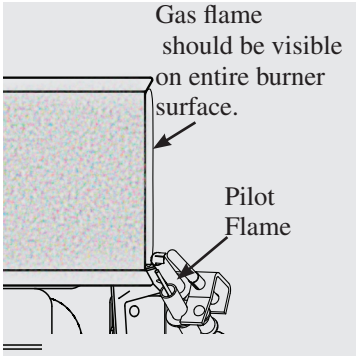

Proper burner and pilot burner pattern.

Burner Inspection

Visually inspect the pilot burner and main burner annually.

Through the sight glass, inspect the pilot burner flame with the main burner off and inspect the main burner while firing.

If any unusual burner operation is noted, the water heater should be shut off until qualified service assistance can be obtained.

The burner operates in radiant mode and glows bright orange when burning correctly. Allow approximately 30 seconds after turning on for the burner to reach the radiant mode

⚠CAUTION: For your safety, cleaning of the burner must be performed only by qualified service personnel. The burner chamber is a sealed area. If the burner inner door, lower air box, or inner door burner assembly are removed, the inner door gaskets, burner access door gasket, and transition pan gasket must be replaced.

For cleaning, remove the inner door and inner door burner assembly from the water heater. A vacuum cleaner can be used on the burner and inside the water heater. The burner can also be cleaned by blowing air over the burner surface. Do not allow any large debris to remain inside the burner. Refer to page 23.

Vacation and Extended Shut-Down

NOTICE: Refer to the Hydrogen Gas Caution in the Operating Instructions.

If the water heater is to remain idle for an extended period of time, the power and water to the appliance should be turned off to conserve energy and prevent a build-up of dangerous hydrogen gas.

The water heater and piping should be drained if they might be subjected to freezing temperatures.

After a long shut-down period, the water heater's operation and controls should be checked by qualified service personnel. Make certain the water heater is completely filled again before placing it in operation.

Anode Rod

NOTICE: Do not remove the anode rod from the water heater's tank, except for inspection and/or replacement, as operation with the anode rod removed will greatly shorten the life of the glass lined tank and will exclude warranty coverage.

This water heater is equipped with an anode rod designed to prolong the life of the glass lined tank. The anode rod is slowly consumed, thereby eliminating or minimizing corrosion of the glass lined tank.

Water sometimes contains a high sulfate and/or mineral content and together with cathodic protection process can produce a hydrogen sulfide, or rotten egg odor in the heated water. Chlorination of the water supply should minimize the problem.

Before You Call For Service…

Troubleshooting Tips

Save time and money! Review the charts on the following pages first and you may not need to call for service.

This water heater incorporates a combustion shut off device that shuts the operation of the water heater down if undesirable combustion conditions occur. Such as the presence of flammable vapors or blockage of the combustion air inlet openings. Please contact a Qualified Service Technician if this occurs.

Problem	Possible Causes	What To Do
Condensation	This usually happens when a new water heater is filled for the first time.	● This is normal. After the water in the tank warms up, the condensation will disappear. If, however, the condition persists, examine the piping and fittings for possible leaks.
	Moisture from the products of combustion condensing on the tank surface.	● This is normal and will disappear in time. Excessive condensation can cause pilot burner outage.
	An undersized water heater will cause condensation.	● Use a water heater size that meets the requirements of your needs.
Yellow flame or soot	Scale on top of the burner.	● Contact a qualified service technician to remove scale.
	Flue or Combustion air inlet openings are restricted.	Remove obstruction or debris from flue or combustion air inlet openings on water heater jacket.
	Not enough combustion or ventilation air supplied to the water heater location.	● Proper operation of the water heater requires air for combustion and ventilation. See the Combustion and Ventilation Air information in the "Installing The Water Heater" section of this manual.
Unable to light the pilot burner	Air in gas line.	● Contact a qualified service technician to purge the air from the gas line.
	Pilot burner orifice clogged.	● The pilot burner should be cleaned or replaced by a qualified service technician.
	Pilot burner tube pinched or clogged.	● The pilot burner should be cleaned, repaired or replaced by a qualified service technician.
	Gas Cock Knob not correctly positioned.	● See the "Lighting The Water Heater" section of this manual.
Pilot burner does not stay when the BLACK button is released	Loose thermocouple.	● The connection at the gas control (thermostat) should be tightened by a qualified service technician.
	Thermocouple defective.	● The thermocouple should be replaced by a qualified service technician.
	Safety magnet defective.	● The gas control (thermostat) should be replaced by a qualified service technician.
	Gas Controls (Thermostat's) single use gas shut-off device has opened.	● The gas control (thermostat) should be replaced by a qualified service technician.
	Combustion Shutoff Device Tripped.	● The combustion shutoff device should be inspected by a qualified service technician.

⚠**CAUTION: For your safety DO NOT attempt repair of gas piping, gas control (thermostat), burners, vent connectors or other safety devices. Refer repairs to qualified service personnel.**

Before You Call For Service…

Problem	Possible Causes	What To Do
Rumbling noise	Scale and sediment in tank.	● Clean tank.
Relief valve producing popping noise or draining	Pressure build up caused by thermal expansion to a closed system.	● This is an unacceptable condition and must be corrected. Contact the water supplier or plumbing contractor on how to correct this. Do not plug the relief valve outlet.
Not enough or no hot water	Water usage may have exceeded the capacity of the water heater.	● Wait for the water heater to recover after an abnormal demand.
	Low gas pressure.	● Check gas supply pressure and manifold pressure.
	The pilot burner may be out.	● Check the pilot burner. If necessary, relight using the instructions in the "Lighting The Water Heater" section of this manual.
	The gas control (thermostat) may be set too low.	● See the "Water Temperature Setting" of The Water Heater section of this manual.
	Leaking or open hot water faucets.	● Make sure all faucets are closed.
	Combustion Shutoff System tripped	● Contact a qualified service technician.
Water is too hot	The gas control (thermostat) is set too high.	● See the "Water Temperature Setting" of The Water Heater section of this manual.
	Gas Control (Thermostat) Defective.	● Contact a qualified service technician to replace the gas control (thermostat).
Pilot Burner Lights, but Main Burner will not stay lit.	Combustion Shutoff System tripped.	● Contact a qualified service technician.

⚠CAUTION: For your safety DO NOT attempt repair of gas piping, gas control (thermostat), burners, vent connectors o other safety devices. Refer repairs to qualified service personnel.

Replacement Parts.

For 28, 38, 40, 48, and 50 gallon models using natural or LP gas.

Instructions For Placing a Parts Order

All parts orders should include:

1. The model and serial number of the water heater from the rating plate.
2. Specify type of gas (natural or LP) as marked on the rating plate.
3. Part description (as noted below) and number of parts desired.

⚠CAUTION: For your safety, DO NOT attempt repair of gas piping, gas control (thermostat), burners, vent connectors or other safety devices. Refer repairs to qualified service personnel.

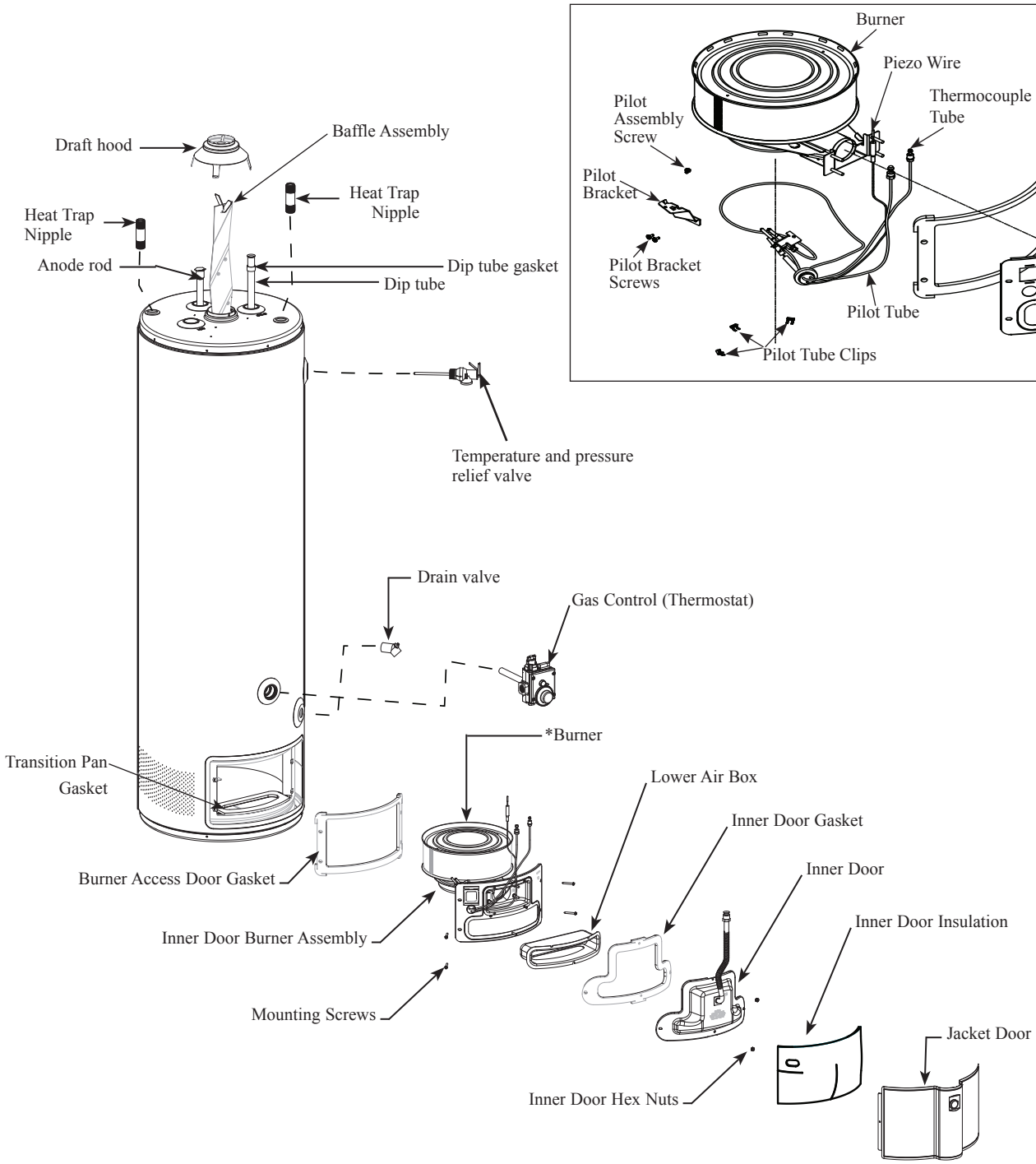

IF YOU NEED SERVICE

1. Should you have any questions about your new water heater, or if it requires adjustment, repair, or routine maintenance, it is suggested that you first contact your installer, plumbing contractor or previously agreed upon service agency. In the event the firm has moved, or is unavailable, refer to the telephone directory, commercial listings or local utility for qualified service assistance.

2. Should your problem not be solved to your complete satisfaction, you should then contact the Manufacturer's National Service Department at the following address:

   2600 Gunter Park Drive East
   Montgomery, Alabama 36109-1413
   Phone: 1-800-432-8373.

   When contacting the manufacturer, the following information will be requested:

a. Model and serial number of the water heater as shown on the rating plate attached to the jacket of the heater.
b. Address where the water heater is located and physical location.
c. Name and address of installer and any service agency who performed service on the water heater.
d. Date of original installation and dates any service work was performed.
e. Details of the problems as you can best describe them.
f. List of people, with dates, who have been contacted regarding your problem.